AIRBUS FILES PATENT FOR UNUSUAL HYBRID VERTICAL TAKEOFF AIRCRAFT

News / Events / Festivals, Manufacturer

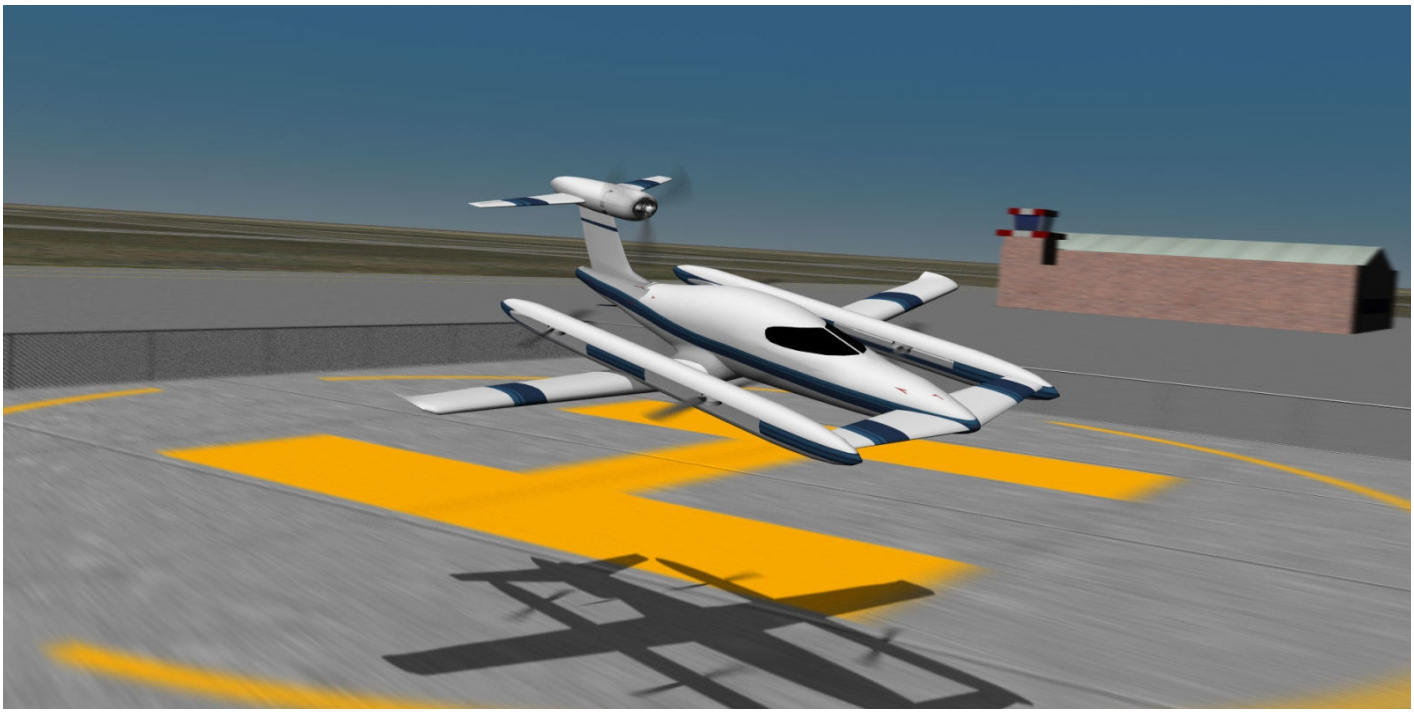

Aircraft makers have long sought to combine vertical landing and takeoff capability with the high speed and long range of a traditional fixed-wing airliner. Many have tried, yet nothing has become a viable mainstream aircraft. Now Airbus seems to be getting into the game with a new design outside the typical realm of passenger jets.

The aircraft manufacturer filed a patent for an aircraft capable of vertical takeoff that can transition to horizontal flight. The plane uses at least four rotors to supply that vertical lift. These are powered by independent electric motors and would operate in a similar fashion to a quadcopter. Energy for these motors would be provided by batteries and a generator connected to an internal combustion engine. This same engine will power a forward-facing propellor that will pull the aircraft through the air once it transitions to horizontal flight.

The patent description is specific about the fact that the vertical rotors can be stowed inside pylons. Each pylon will house two rotor assemblies each consisting of two rotor blades. Once in forward flight, the rotor assemblies will be stopped and aligned within their respective pylons. There they will be fully enclosed, eliminating any unnecessary drag. Once the rotors are secured, doors will close to seal the pylons. With the plane in typical horizontal flight, the wing becomes responsible for the vertical force required to keep the aircraft aloft.

© 2015-2026 50SKYSHADES.COM — Reproduction, copying, or redistribution for commercial purposes is prohibited.

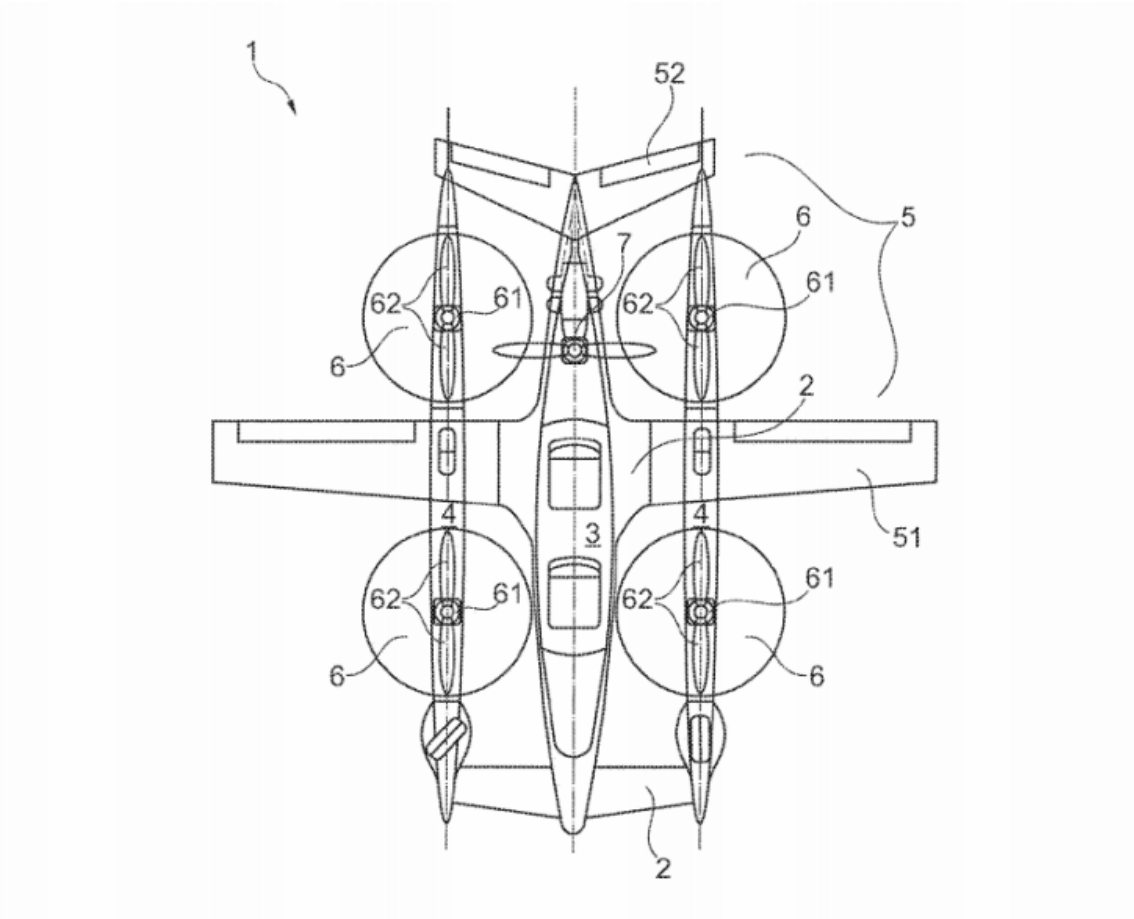

Variations of the design also call for dual forward-facing propellers to further increase horizontal thrust, allowing the aircraft to operate at higher speed or to carry a larger load. This would also double the amount of electrical energy created by what are now two generators, thereby increasing the load available for the vertical portion of each flight.

The patent does not specify dimensions of the proposed aircraft, but included drawings seem to indicate room for at least two passengers. The description implies that the design could be scalable to sizes small enough to compete with delivery drones such as seen by Amazon or large enough to carry troops or cargo into the battlefield.

We don't know whether this unusual patent design will ever come to production or if a prototype has been planned. But with the rise of commercially available drones and technology to support larger electric motors, batteries, and generators combined with inexpensive automated flight stability computers, it won't be long before an aircraft like this will be an everyday sight.

05 SEPTEMBER 2016

SOURCE: POPULARMECHANICS
ARTICLE LINK:
https://50skyshades.com/index.php/news/manufacturer/airbus-files-patent-for-unusual-hybrid-vertical-takeoff-aircraft

© 2015-2026 50SKYSHADES.COM — Reproduction, copying, or redistribution for commercial purposes is prohibited.